English

# globalwater solutions ltd.

## World's Highest Quality
## Pressure Tank

EXCELLENCE THROUGH QUALITY

**SALES BY LIUMENG CAMBODIA**
Phone: +855 16 955 955 | Telegram: @LIUMENGKH
info@LMCambodia.com | www.LMCambodia.com

EXCELLENCE THROUGH QUALITY

# Contents


01 GWS Introduction
03 Product Applications
04 Energy Saving Solutions

**POTABLE WATER TANKS**

05 PressureWave™
07 HydroGuard™
09 All-Weather™
11 M-Inox™
13 Max™ & UltraMax™
15 Challenger™
17 C2-Lite CAD™
19 FlowThru™
21 SuperFlow™
23 ThermoWave™

**NON-POTABLE WATER TANKS**

25 HeatWave™
27 SolarWave™

**OTHER PRODUCTS/ACCESSORIES**

29 PumpWave™
30 Accesories


# GLOBAL WATER SOLUTIONS LTD. OFFERS

## A COMPREHENSIVE AND WIDE RANGE OF PRESSURE VESSELS

for heating, thermal, pressure booster, water hammer, reverse osmosis and water well applications.



● Warehouses ● GWS Offices ● GWS Manufacturing Facilities ● Contract Manufacturing

GLOBAL WATER SOLUTIONS LTD. products are available in 100 countries worldwide covering Central and South America, Europe, The Middle East, Africa, Australia, New Zealand and Asia. GWS is a member of the Swan Group.


**SALES BY LIUMENG CAMBODIA**
Phone: +855 16 955 955 | Telegram: @LIUMENGKH
info@LMCambodia.com | www.LMCambodia.com

# GLOBAL WATER SOLUTIONS LTD.'S

unique product offering includes both its patent protected CAD-2 diaphragm tanks as well as its line of single diaphragm tanks with a patented water connection and now also a series with replaceable tiered membrane design. This combination provides GLOBAL WATER SOLUTIONS LTD. customers with flexibility in selecting products for specific applications. All our products undergo a series of tests to insure the excellent quality. Beyond that, we offer our customers an extensive warranty.



GLOBAL WATER SOLUTIONS LTD. is also on the forefront of international regulatory issues with approvals from WRAS, NSF, PED, ACS and other country specific approvals.



**SALES BY LIUMENG CAMBODIA**
Phone: +855 16 955 955 | Telegram: @LIUMENGKH
info@LMCambodia.com | www.LMCambodia.com

# Product Applications

Our wide product range offers a full-line of pressure vessels for different applications, pressure vessels in sizes from 0.16-10,000 liters and in 10, 16 and 25 bar pressure ratings are available to accommodate all your requirements.

- **PressureWave™ , Challenger™, SuperFlow™ & C2Lite™, FlowThru™ Series**
  Booster systems, water well systems, sprinklers, HVAC, thermal expansion, irrigation systems, water hammer arresting.
- **HeatWave™ Series**
  Hydronic expansion, boiler systems.
- **SolarWave™ Series**
  Closed loop solar systems, solar hot water expansion.
- **ThermoWave™ Series**
  Potable Water Heating Applications.
- **Ultra(Max)™ Series**
  High pressure applications (16 and 25 bar).
- **M-Inox™ Series**
  Stainless steel tanks ideally suited for special demands and environments.
- **HydroGuard™ Series**
  Water hammer arresting, plumbing applications.






**SALES BY LIUMENG CAMBODIA**
Phone: +855 16 955 955 | Telegram: @LIUMENGKH
info@LMCambodia.com | www.LMCambodia.com

# Energy Saving Solutions

**Oversize your pressure tank and get the following benefits:**

- Substantially reduce electric power consumption by reducing small draw off pump starts, i.e., evaporative coolers, toilet flushes, leaks, drip irrigation, etc.
- Extend pump life by dramatically reducing wear on moving parts
- Protect against heat expansion damage to pump bodies
- Reduce noise from unnecessary pump starts
- Eliminate motor burn outs and low flow cycling
- Eliminate pump body failures due to water hammer




*Minimize your environmental footprint.*



All this with a tank that...

... requires NO maintenance (does not require regular air charge checks) and

... has the longest warranty for guaranteed reliability.



**SALES BY LIUMENG CAMBODIA**
Phone: +855 16 955 955 | Telegram: @LIUMENGKH
info@LMCambodia.com | www.LMCambodia.com

# PressureWave™ SERIES



## FEATURES

- Single diaphragm design
- NSF Standard 61, CE/PED, WRAS, ACS, ISO:9001 approved
- Patented stainless steel water connection
- Virgin polypropylene liner
- Two part polyurethane, epoxy primed paint finish
- Leak free, o-ring sealed air valve cap
- Comprehensive testing
- No maintenance

PressureWave™ tanks are ideally suited for a wide range of applications, including booster systems, thermal expansion, irrigation systems, and hydraulic hammer arresting.

The PressureWave™ Series is constructed of a virgin polypropylene liner combined with an FDA approved high grade butyl diaphragm. This is held against the wall of the tank with a steel clench ring. The brass air valve, sealed by a threaded o-ring valve cap, prevents air leaks. Water enters the tank through a patented stainless steel water connection. The diaphragm and liner are both reinforced in specific wear areas for longer life. All internal parts including the air valve are rounded to prevent piercing of the diaphragm in extreme conditions. The water connection uniquely provides a dual water/air seal ensuring a complete leak free and maintenance free pressure vessel.

On the exterior the almond colored two-part polyurethane paint finish over an epoxy undercoating provides hundreds of hours of UV and salt spray protection.

PressureWave™ tanks are quality tested at several stages on the production line to insure the structural integrity of every tank.

PressureWave™ tanks represent the best value for the investment and are the best quality pressure vessels available today.



**SALES BY LIUMENG CAMBODIA**
Phone: +855 16 955 955 | Telegram: @LIUMENGKH
info@LMCambodia.com | www.LMCambodia.com

# SPECIFICATIONS

## PressureWave™ Series Models

| BSP | NPT | Nominal Volume | | Shipping (box) Volume | | Shipping (box) Weight | | Dimensions | | | | | |
|---|---|---|---|---|---|---|---|---|---|---|---|---|---|
| | | | | | | | | A | | B | | C | |
| | | liter | gal | $m^3$ | $ft^3$ | kg | lbs | cm | inches | cm | inches | cm | inches |
| **Inline Models** | | | | | | | | | | | | | |
| PWB-2LX* | PWN-2LX* | 2 | 0.5 | 0.06 | 2.12 | 13.60 | 29.98 | 20.90 | 8.23 | 12.60 | 4.96 | | |
| PWB-3LX* | PWN-3LX* | 3 | 0.8 | 0.031 | 1.01 | 9.19 | 20,26 | 24.30 | 9.57 | 14.30 | 5.51 | | |
| PWB-4LX | PWN-4LX | 4 | 1.1 | 0.01 | 0.35 | 1.74 | 3.84 | 26.10 | 10.28 | 16.20 | 6.38 | | |
| PWB-6LX* | PWN-6LX* | 6 | 1.6 | 0.047 | 1.66 | 7.65 | 15.43 | 29.00 | 11.42 | 17.80 | 6.69 | | |
| PWB-8LX | PWN-8LX | 8 | 2.1 | 0.014 | 0.49 | 2.47 | 5.45 | 31.56 | 12.32 | 20.20 | 7.95 | | |
| PWB-12LX | PWN-12LX | 12 | 3.2 | 0.023 | 0.81 | 3.21 | 7.08 | 36.70 | 14.45 | 23.00 | 9.06 | | |
| PWB-18LX | PWN-18LX | 18 | 4.8 | 0.03 | 1.06 | 4.07 | 8.97 | 36.70 | 14.45 | 27.90 | 10.98 | | |
| PWB-24LX | PWN-24LX | 24 | 6.3 | 0.042 | 1.48 | 5.52 | 12.17 | 44.70 | 17.60 | 29.00 | 11.42 | | |
| PWB-35LX | PWN-35LX | 35 | 9.3 | 0.056 | 1.98 | 7.28 | 16.05 | 48.10 | 18.90 | 31.80 | 12.52 | | |
| **Horizontal Models** | | | | | | | | | | | | | |
| PWB-8LH | PWN-8LH | 8 | 2.1 | 0.013 | 0.46 | 2.46 | 5.42 | 31.30 | 12.32 | 23.20 | 9.13 | 11.60 | 4.57 |
| PWB-12LH | PWN-12LH | 12 | 3.2 | 0.024 | 0.85 | 3.56 | 7.84 | 36.70 | 14.45 | 26.00 | 10.24 | 13.25 | 5.12 |
| PWB-20LH | PWN-20LH | 20 | 5.3 | 0.04 | 1.41 | 4.99 | 11.00 | 44.70 | 17.60 | 29.20 | 11.57 | 14.50 | 5.79 |
| PWB-24LH | PWN-24LH | 24 | 6.3 | 0.047 | 1.65 | 6.00 | 13.23 | 44.70 | 17.60 | 32.10 | 12.64 | 16.10 | 6.34 |
| PWB-35LH | PWN-35LH | 35 | 9.3 | 0.061 | 2.15 | 7.80 | 17.20 | 48.10 | 18.94 | 35.30 | 13.90 | 17.90 | 7.05 |
| PWB-60LH | PWN-60LH | 60 | 15.9 | 0.09 | 3.18 | 11.51 | 25.37 | 53.00 | 20.87 | 42.40 | 16.69 | 21.50 | 8.46 |
| PWB-80LH | PWN-80LH | 80 | 21.1 | 0.13 | 4.59 | 16.22 | 35.76 | 72.60 | 28.58 | 42.40 | 16.69 | 21.50 | 8.46 |
| PWB-100LH | PWN-100LH | 100 | 26.4 | 0.16 | 5.65 | 19.84 | 43.74 | 72.00 | 28.35 | 47.50 | 18.70 | 24.50 | 9.65 |
| **Vertical Models w/ base** | | | | | | | | | | | | | |
| PWB-35LV | PWN-35LV | 35 | 9.3 | 0.063 | 2.22 | 7.70 | 16.98 | 55.50 | 21.85 | 31.80 | 12.52 | 12.00 | 4.72 |
| PWB-60LV | PWN-60LV | 60 | 15.9 | 0.098 | 3.46 | 11.28 | 24.87 | 62.00 | 24.41 | 38.90 | 15.31 | 12.70 | 5.00 |
| PWB-80LV | PWN-80LV | 80 | 21.1 | 0.13 | 4.59 | 16.24 | 35.80 | 81.50 | 32.09 | 38.90 | 15.31 | 12.70 | 5.00 |
| PWB-100LV | PWN-100LV | 100 | 26.4 | 0.16 | 5.65 | 19.72 | 43.47 | 80.40 | 31.65 | 43.00 | 16.93 | 12.90 | 5.08 |
| PWB-130LV | PWN-130LV | 130 | 34.3 | 0.21 | 7.42 | 26.65 | 58.75 | 107.40 | 42.28 | 43.00 | 16.93 | 12.90 | 5.08 |
| PWB-150LV | PWN-150LV | 150 | 40.0 | 0.28 | 9.89 | 34.63 | 76.30 | 93.80 | 36.38 | 53.00 | 20.87 | 13.85 | 5.45 |

Standard System Connection: 1"
All connections are stainless steel unless stated otherwise. Tank precharge: 1.9 bar / 28 psi
Maximum Working Pressure: 10 bar / 150 psi Maximum Working Temperature: 90°C / 194°F
Available in 16 and 25 bar as Max™ and UltraMax™ Series
Available in smaller sizes as HydroGuard™ Series
* PWB-2LX and PWN-2LX: 12 pcs/box, PWB-3LX and PWN-3LX: 6pcs/box, PWB-6LX and PWN-6LX: 4 pcs/box

Note: Minor dimensional variation may occur

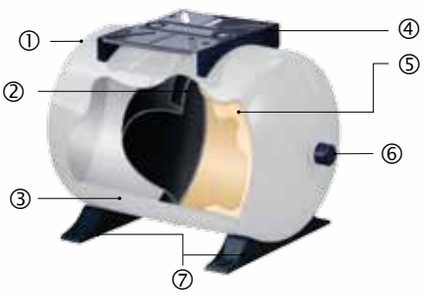


① Leak free, o-ring sealed air valve cap
② Single diaphragm design
③ Two part polyurethane, epoxy primed paint finish
④ Nylon Plastic Pump Stand
⑤ Virgin polypropylene liner
⑥ Patented stainless steel water connection
⑦ Plastic Tank Feet

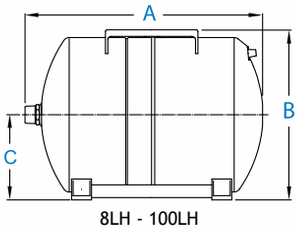

8LH - 100LH

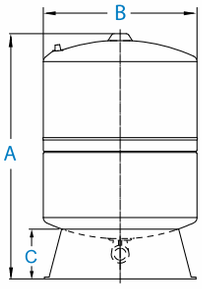

35LV - 150LV

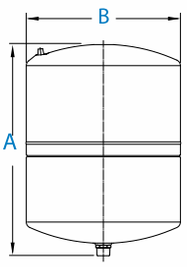

12LX, 18LX, 24LX

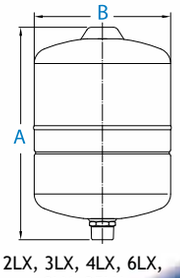

2LX, 3LX, 4LX, 6LX, 8LX, 35LX

CE ACS Approved WRAS APPROVED PRODUCT NSF



SALES BY LIUMENG CAMBODIA
Phone: +855 16 955 955 | Telegram: @LIUMENGKH
info@LMCambodia.com | www.LMCambodia.com

# HydroGuard™ SERIES



## FEATURES

- Single diaphragm design
- Patented stainless steel or Noryl water connection
- Two part polyurethane, epoxy primed paint finish
- Leak free, o-ring sealed air valve cap
- Comprehensive testing
- No maintenance

HydroGuard™ shock arrestors are specially designed for use in hydraulic hammer arresting applications.

HydroGuard™ shock arrestors are built to reduce or eliminate hydraulic shock, otherwise known as water hammer. They do this by absorbing pressure surges within water or other fluids that are suddenly stopped or forced in other directions by fast closing valves. HydroGuard™ shock arrestors are best used at the point of shock and should be installed as close to the valve or piping where the shock originates from.

HydroGuard™ shock arrestors are designed with the latest diaphragm technology. A high grade butyl diaphragm is sealed inside the vessel creating a barrier between fluid and air chambers. The air chamber acts as a cushion which compresses when system pressure suddenly increases or surges as a result of hydraulic shock.
HydroGuard™ shock arrestors are quality tested at several stages along the production line in ensure the structural integrity of every tank.

HydroGuard™ shock arrestors represent the best value for the investment and are the best quality shock arrestors available today.



**SALES BY LIUMENG CAMBODIA**
Phone: +855 16 955 955 | Telegram: @LIUMENGKH
info@LMCambodia.com | www.LMCambodia.com

# SPECIFICATIONS

## HydroGuard™ Series Models

| NPT | BSP | Connection | Nominal Volume | | Shipping (box) Volume | | Pieces per box | Shipping (box) Weight | | Dimensions | | | |
|---|---|---|---|---|---|---|---|---|---|---|---|---|---|
| | | | | | | | | | | A | | B | |
| | | | liter | gal | $m^3$ | $ft^3$ | | kg | lbs | cm | inches | cm | inches |
| HGNSA-0.16LX | HGNSA-0.16LX | 1/2” SS | 0.16 | 0.04 | 0.05 | 1.67 | 24 | 8.32 | 18.34 | 11.30 | 4.45 | 8.50 | 3.40 |
| HGBSC-0.3LX | HGBSC-0.3LX | 1/2” Noryl | 0.3 | 0.08 | 0.05 | 1.67 | 40 | 16.58 | 36.55 | 10.35 | 4.07 | 9.70 | 3.80 |
| HGBSC-0.5LX | HGBSC-0.5LX | 1/2” Noryl | 0.5 | 0.13 | 0.06 | 1.97 | 24 | 15.71 | 34.63 | 13.50 | 5.31 | 10.50 | 4.13 |
| HGBSF-0.6LX | HGBSF-0.6LX | 1/2” Noryl | 0.6 | 0.16 | 0.04 | 1.24 | 20 | 11.68 | 25.75 | 9.70 | 3.82 | 16.30 | 6.42 |
| HGPSO-1LX | HGPSO-1LX | 1/2” Nylon | 1 | 0.26 | 0.05 | 1.67 | 15 | 12.15 | 26.79 | 14.35 | 5.65 | 13.60 | 5.35 |
| HGPSR-1LX | HGPSR-1LX | 1/2” SS | 1 | 0.26 | 0.07 | 2.42 | 20 | 18.42 | 40.61 | 19.68 | 7.75 | 12.02 | 4.73 |
| HGPSO-2LX | HGPSO-2LX | 3/4” Nylon | 2 | 0.5 | 0.07 | 2.42 | 12 | 15.87 | 34.99 | 15.83 | 6.23 | 16.30 | 6.41 |
| HGBPA-2LX | HGNPA-2LX | 1" BSP / NPT | 2 | 0.5 | 0.06 | 1.97 | 12 | 13.62 | 30.03 | 20.80 | 8.19 | 12.60 | 5.00 |
| HGBPA-4LX | HGNPA-4LX | 1" BSP / NPT | 4 | 1.1 | 0.01 | 0.28 | 1 | 1.83 | 4.03 | 26.10 | 10.28 | 16.20 | 6.40 |

Note: Variation available, ask your sales person
Maximum Working Pressure: 10 bar / 150 psi
Maximum Working Temperature: 90°C / 194°F

Note: Minor dimensional variation may occur

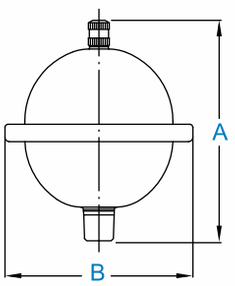

HGNSA-0.16LX

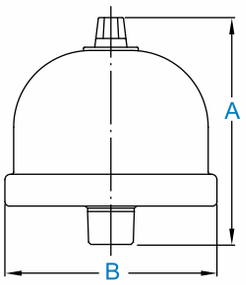

HGBSC-0.3LX

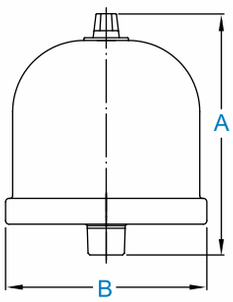

HGBSC-0.5LX

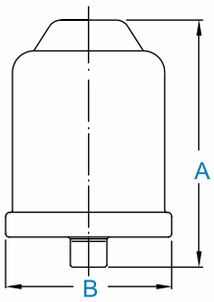

HGBSF-0.6LX

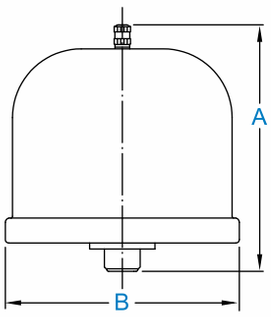

HGPSO-1LX

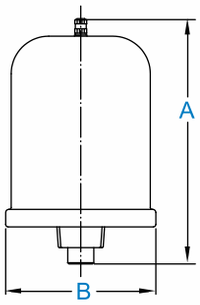

HGPSR-1LX

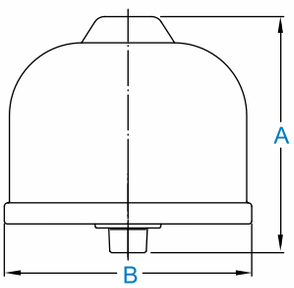

HGPSO-2LX

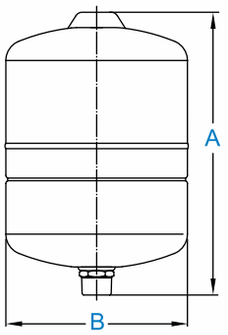

HGBPA-2LX / HGNPA-2LX
HGBPA-4LX / HGNPA-4LX



SALES BY LIUMENG CAMBODIA
Phone: +855 16 955 955 | Telegram: @LIUMENGKH
info@LMCambodia.com | www.LMCambodia.com

# All-Weather™ SERIES




## FEATURES

- Rugged Polypropylene outer shell
- 10 bar pressure rating
- Single diaphragm design
- Comprehensive testing
- Virgin Polypropylene liner
- Patented stainless steel water connection
- Leak free O-Ring sealed air valve
- Maintenance free

The GWS All-Weather Pressure Tank is constructed with a high grade steel tank encased in a rugged polypropylene outer shell. The patented PLASTEEL shell creates an impenetrable layer of protection that shields against the harshest of elements. Wind, rain, sleet or sun are no match for the All-Weather Pressure Tank, making it the perfect solution for marine and mining applications, as well as harsh environmental conditions. With the highest quality and all Major Global Approvals, the GWS All-Weather Pressure Tank represents the greatest innovation in pressure tank technology today.



SALES BY LIUMENG CAMBODIA
Phone: +855 16 955 955 | Telegram: @LIUMENGKH
info@LMCambodia.com | www.LMCambodia.com

# SPECIFICATIONS

## All-Weather™ Series Models

| BSPT | NPT | Connection | Nominal Volume | | Shipping (box) Volume | | Shipping (box) Weight | | Dimensions | | | |
|---|---|---|---|---|---|---|---|---|---|---|---|---|
| | | | | | | | | | A | | B | |
| New Part Number | New Part Number | BSP / NPT | liter | gal | $m^3$ | $ft^3$ | kg | lbs | cm | inches | cm | inches |
| **Inline Models** | | | | | | | | | | | | |
| AWB-18LX | AWN-18LX | 1” | 18 | 4.8 | 0.03 | 1.18 | 5.23 | 11.53 | 42.5 | 16.7 | 27.6 | 10.9 |
| AWB-24LX | AWN-24LX | 1” | 24 | 6.3 | 0.04 | 1.52 | 6.11 | 13.47 | 45.4 | 17.9 | 30.1 | 11.9 |

Tank precharge: 1.9 bar / 28 psi
Maximum Working Pressure: 10 bar / 150 psi
Maximum Working Temperature: 90˚C / 194˚F

Note: Minor dimensional variation may occur

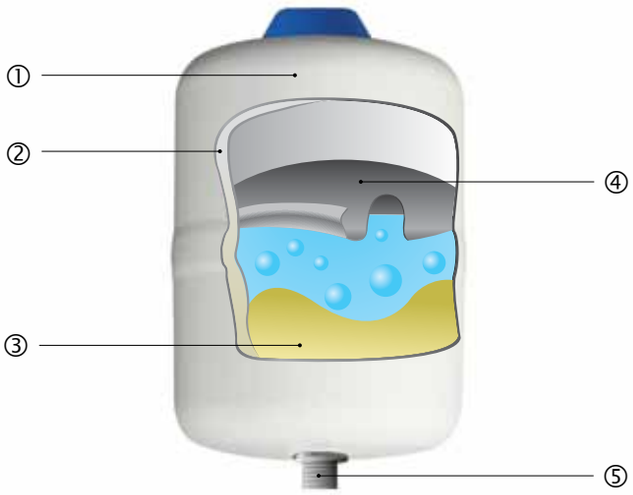


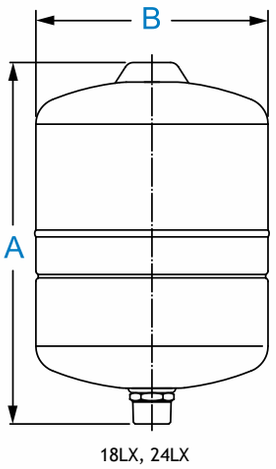


18LX, 24LX

① Polypropylene shell
② Internal steel dome
③ Virgin polypropylene liner
④ High grade butyl diaphram
⑤ Patened stainless steel water connection



SALES BY LIUMENG CAMBODIA
Phone: +855 16 955 955 | Telegram: @LIUMENGKH
info@LMCambodia.com | www.LMCambodia.com

# M-Inox™ SERIES



## FEATURES

- High Grade Stainless Steel Tank construction
- Single diaphragm design
- NSF Standard 61, CE/PED, WRAS, ACS, ISO:9001 approved
- Patented stainless steel water connection
- Virgin polypropylene liner
- Leak free, o-ring sealed air valve cap
- Comprehensive testing
- No maintenance

M-Inox™ stainless steel tanks are ideally suited for special demands and environments.

The M-Inox™ Series is constructed of a virgin polypropylene liner combined with an FDA approved high grade butyl diaphragm. This is held against the wall of the tank with a steel clench ring. The brass air valve, sealed by a threaded o-ring valve cap, prevents air leaks. Water enters the tank through a patented stainless steel water connection. The diaphragm and liner are both reinforced in specific wear areas for longer life. All internal parts including the air valve are rounded to prevent piercing of the diaphragm in extreme conditions. The water connection uniquely provides a dual water/air seal ensuring a complete leak free and maintenance free pressure vessel.

M-Inox™ tanks are quality tested at several stages on the production line to insure the structural integrity of every tank.

M-Inox™ tanks represent the best value for the investment and are the best quality stainless steel pressure vessels available today.



**SALES BY LIUMENG CAMBODIA**
Phone: +855 16 955 955 | Telegram: @LIUMENGKH
info@LMCambodia.com | www.LMCambodia.com

# SPECIFICATIONS

## M-Inox™ Series Models

| BSP | NPT | Connec-tion | Nominal Volume | | Shipping (box) Volume | | Shipping (box) Weight | | Dimensions | | | | | |
|---|---|---|---|---|---|---|---|---|---|---|---|---|---|---|
| | | | | | | | | | A | | B | | C | |
| | | BSP / NPT | liter | gal | $m^3$ | $ft^3$ | kg | lbs | cm | inches | cm | inches | cm | inches |
| **Inline Models** | | | | | | | | | | | | | | |
| MIB-8LX | MIN-8LX | 1” | 8 | 2.1 | 0.014 | 0.49 | 2.35 | 5.18 | 31.50 | 12.40 | 20.20 | 7.95 | | |
| MIB-18LX | MIN-18LX | 1” | 18 | 4.8 | 0.03 | 1.06 | 4.26 | 9.39 | 38.40 | 15.12 | 27.90 | 11.20 | | |
| MIB-24LX | MIN-24LX | 1" | 24 | 6.3 | 0.042 | 1.48 | 5.32 | 11.73 | 46.75 | 18.40 | 29.00 | 11.42 | | |
| **Horizontal Models** | | | | | | | | | | | | | | |
| MIB-18LH | MIN-18LH | 1” | 18 | 4.8 | 0.048 | 1.70 | 4.70 | 10.36 | 38.40 | 15.12 | 30.90 | 12.17 | 15.50 | 6.10 |

Tank precharge: 1.9 bar / 28 psi

Maximum Working Pressure: 10 bar / 150 psi Maximum Working Temperature: 90°C / 194°F

Note: Minor dimensional variation may occur




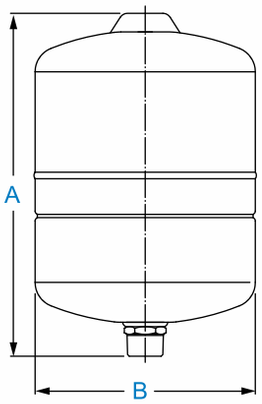


8LX, 18LX, 24LX

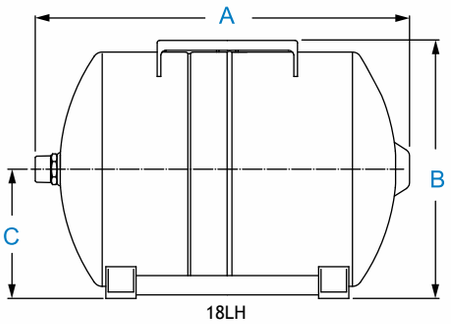


18LH

① Stainless Steel Tank
② Water Chamber
③ Patened Stainless Steel Water Connection
④ Leak-Free O-ring Sealed Air Valve Cap
⑤ High Grade Butyl Diaphram
⑥ Virgin Polypropylene Liner

CE ACS Approved WRAS APPROVED PRODUCT 수도용 위생안전기준



SALES BY LIUMENG CAMBODIA
Phone: +855 16 955 955 | Telegram: @LIUMENGKH
info@LMCambodia.com | www.LMCambodia.com

# Max™ & UltraMax™ SERIES



## FEATURES

- Suitable for many high-pressure applications
- Super thick steel construction
- Patented stainless steel water connection
- Virgin polypropylene liner
- Two part polyurethane, epoxy primed paint finish
- Leak free, o-ring sealed air valve cap
- Comprehensive testing
- No maintenance
- Single diaphragm design
- Available in 16 bar and 25 bar maximum pressure

## SPECIFICATIONS

### UltraMax™ Series Models (25 bar)

| BSP | NPT | Connection | Nominal Volume | | Shipping (box) Volume | | Shipping (box) Weight | | Dimensions | | | | | |
|---|---|---|---|---|---|---|---|---|---|---|---|---|---|---|
| | | | | | | | | | A | | B | | C | |
| | | | liter | gal | $m^3$ | $ft^3$ | kg | lbs | cm | inches | cm | inches | cm | inches |
| **Inline Models** | | | | | | | | | | | | | | |
| UMB-8LX | UMN-8LX | 1" | 8 | 2.1 | 0.014 | 0.49 | 3.16 | 6.97 | 31.30 | 12.32 | 20.30 | 7.99 | | |
| UMB-24LX | UMN-24LX | 1" | 24 | 6.3 | 0.042 | 1.48 | 8.04 | 17.72 | 44.70 | 17.60 | 29.30 | 11.54 | | |
| **Vertical Models w/ base** | | | | | | | | | | | | | | |
| UMB-100LV | UMN-100LV | 1" | 100 | 26.3 | 0.16 | 5.69 | 36.81 | 81.15 | 81.3 | 32.24 | 43.5 | 17.13 | 12.9 | 5.08 |

All connections are made of stainless steel. Tank precharge: 4.0 bar / 58 psi

Maximum working pressure: 25 bar / 362 psi. Maximum working temperature: 90°C / 194°F

Note: Minor dimensional variation may occur



SALES BY LIUMENG CAMBODIA
Phone: +855 16 955 955 | Telegram: @LIUMENGKH
info@LMCambodia.com | www.LMCambodia.com

# SPECIFICATIONS

## Max™ Series Models (16 bar)

| BSP | NPT | Connec-tion | Nominal Volume | | Shipping (box) Volume | | Shipping (box) Weight | | Dimensions | | | | | |
|---|---|---|---|---|---|---|---|---|---|---|---|---|---|---|
| | | | | | | | | | A | | B | | C | |
| | | BSP / NPT | liter | gal | $m^3$ | $ft^3$ | kg | lbs | cm | inches | cm | inches | cm | inches |
| **Inline Models** | | | | | | | | | | | | | | |
| MXB-2LX* | MXN-2LX* | 1" | 2 | 0.5 | 0.06 | 2.12 | 13.51 | 29.78 | 20.90 | 8.23 | 12.60 | 4.96 | | |
| MXB-8LX | MXN-8LX | 1" | 8 | 2.1 | 0.014 | 0.49 | 2.96 | 6.53 | 31.30 | 12.32 | 20.20 | 7.95 | | |
| MXB-12LX | MXN-12LX | 1" | 12 | 3.2 | 0.023 | 0.81 | 3.20 | 7.05 | 36.81 | 14.49 | 23.00 | 9.06 | | |
| MXB-18LX | MXN-18LX | 1" | 18 | 4.7 | 0.03 | 1.06 | 4.85 | 10.69 | 36.81 | 14.49 | 27.90 | 10.98 | | |
| MXB-24LX | MXN-24LX | 1" | 24 | 6.3 | 0.042 | 1.48 | 6.27 | 13.82 | 44.70 | 17.60 | 29.00 | 11.42 | | |
| MXB-35LX | MXN-35LX | 1" | 35 | 9.2 | 0.06 | 1.95 | 8.73 | 19.25 | 48.10 | 18.90 | 31.80 | 12.52 | | |
| **Vertical Models w/ base** | | | | | | | | | | | | | | |
| MXB-60LV | MXN-60LV | 1" | 60 | 15.8 | 0.098 | 3.46 | 14.84 | 32.72 | 62.00 | 24.41 | 39.00 | 15.35 | 12.70 | 5.00 |
| MXB-80LV | MXN-80LV | 1" | 80 | 21.0 | 0.13 | 4.59 | 20.32 | 44.80 | 81.50 | 32.09 | 39.00 | 15.35 | 12.70 | 5.00 |
| MXB-100LV | MXN-100LV | 1" | 100 | 26.3 | 0.16 | 5.65 | 26.30 | 57.98 | 80.40 | 31.65 | 43.10 | 16.97 | 12.90 | 5.08 |

* Volume and weight for MXB-2LX and MXN-2LX mentioned for a box with 12 pieces.
All connections are made of stainless steel. Tank precharge: 4.0 bar / 58 psi
Maximum working pressure: 16 bar / 232 psi. Maximum working temperature: 90°C / 194°F

Note: Minor dimensional variation may occur

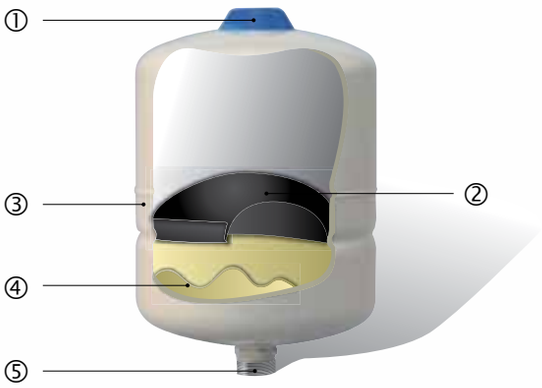


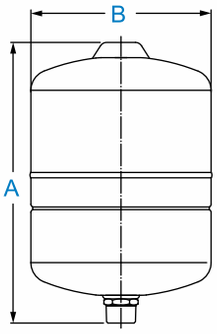


2LX, 8LX, 35LX

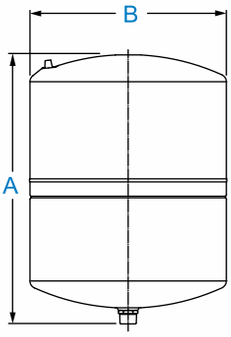


12LX, 18LX, 24LX

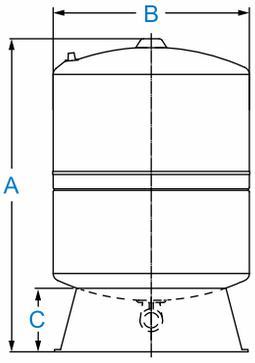


60LV - 100LV

① Leak free, o-ring sealed air valve cap
② Single diaphragm design
③ Two part polyurethane, epoxy primed paint finish
④ Virgin polypropylene liner
⑤ Patented stainless steel water connection

CE ACS Approved WRAS APPROVED PRODUCT NSF



SALES BY LIUMENG CAMBODIA
Phone: +855 16 955 955 | Telegram: @LIUMENGKH
info@LMCambodia.com | www.LMCambodia.com

# Challenger™ SERIES



## FEATURES

- Patented CAD-2 diaphragm technology
- NSF Standard 61, CE/PED, WRAS, ACS, ISO-9001, Gost, Evrazes approved
- Stainless steel water connection
- Condensation reducing design
- Two part polyurethane, epoxy primed paint finish
- Leak free air valve cap sealed with closed cell foam
- Comprehensive testing
- No maintenance

Challenger™ tanks are ideally suited for a wide range of applications, including booster systems, thermal expansion, heating expansion, irrigation systems, and hydraulic hammer arresting.

Water Chamber, Patented Controlled Action Design:
Efficient and cost effective, Challenger™ tanks are designed with a patented controlled action CAD-2 diaphragm assembly. It features a chlorine resistant 100% butyl diaphragm with a precision molded copolymer polypropylene liner for superior air and water separation. The CAD-2 diaphragm assembly is clenched together with a positive lock internal clench ring which contains drawdown water in a pre-charged air atmosphere, thus providing separation between the diaphragm and tank wall. This “air buffer” design means few problems with condensation. Constructed with an FDA approved high grade butyl, the diaphragm assembly seals water in a true non-corrosive chamber.

On the exterior, the almond colored two part polyurethane paint finish over an epoxy undercoating provides hundreds of hours of UV and salt spray protection.

The air chamber is sealed with a fixed o-ring and closed cell foam and will provide many years of leak free and service free life. Challenger™ tanks are quality tested at several stages on the production line to insure the structural integrity of every tank. Challenger™ tanks are the best steel pressure vessels in the market today and represent the best value for the investment.



**SALES BY LIUMENG CAMBODIA**
Phone: +855 16 955 955 | Telegram: @LIUMENGKH
info@LMCambodia.com | www.LMCambodia.com

# SPECIFICATIONS

## Challenger™ Series Models

| BSP | NPT | Nominal Volume | | Shipping (box) Volume | | Shipping (box) Weight | | Dimensions | | | | | | | |
|---|---|---|---|---|---|---|---|---|---|---|---|---|---|---|---|
| | | | | | | | | A | | B | | C | | D | |
| | | liter | gal | $m^3$ | $ft^3$ | kg | lbs | cm | inches | cm | inches | cm | inches | cm | inches |
| GCB-60LV | GCN-15GV | 60 | 15 | 0.10 | 3.65 | 12.25 | 27.0 | 57.27 | 22.55 | 40.68 | 16.02 | 4.80 | 1.89 | 36.93 | 14.54 |
| GCB-80LV | GCN-20GV | 80 | 20 | 0.13 | 4.74 | 15.20 | 33.5 | 75.27 | 29.60 | 40.68 | 16.02 | 4.80 | 1.89 | 36.93 | 14.54 |
| GCB-100LV | GCN-25GV | 100 | 25 | 0.16 | 5.68 | 18.10 | 40.0 | 89.68 | 35.31 | 40.68 | 16.02 | 4.80 | 1.89 | 36.93 | 14.54 |
| GCB-130LV | GCN-35GV | 130 | 35 | 0.20 | 7.08 | 22.50 | 49.5 | 110.94 | 43.68 | 40.75 | 16.02 | 4.80 | 1.89 | 36.93 | 14.54 |
| GCB-200LV | GCN-50GV | 200 | 50 | 0.31 | 10.88 | 34.25 | 75.5 | 105.56 | 41.56 | 53.29 | 21.03 | 5.68 | 2.23 | 44.63 | 17.57 |
| GCB-250LV | GCN-60GV | 250 | 60 | 0.37 | 13.18 | 39.24 | 86.5 | 122.75 | 48.33 | 53.37 | 21.03 | 5.68 | 2.23 | 44.63 | 17.57 |
| GCB-300LV | GCN-80GV | 300 | 80 | 0.46 | 16.25 | 47.17 | 104.0 | 151.27 | 59.56 | 53.37 | 21.03 | 5.38 | 2.23 | 44.63 | 17.57 |
| GCB-325LV | GCN-85GV | 325 | 85 | 0.46 | 16.25 | 48.40 | 106.7 | 116.68 | 45.94 | 66.21 | 26.07 | 6.43 | 2.53 | 54.23 | 21.35 |
| GCB-450LV | GCN-120GV | 450 | 120 | 0.74 | 26.14 | 69.85 | 154.0 | 155.07 | 61.05 | 66.06 | 26.01 | 6.43 | 2.53 | 54.23 | 21.35 |

System Connection:
Models GCB-60LV - GCB-130LV: 1” BSP stainless steel elbow
Models GCB-200LV – GCB-500LV: 1 1/4” BSP stainless steel elbow
Models GCN-15GV - GCN-35GV: 1” NPT stainless steel elbow
Models GCN-50GV - GCN-133GV: 1 1/4” NPT stainless steel elbow

Note: Minor dimensional variation may occur
Please refer to tank packaging for correct factory set pre-charge information.
Maximum working temperature 90°C / 194°F
Maximum working pressure: GCB- 10 bar / 150 psi ; GCN- 8.6bar / 125psi




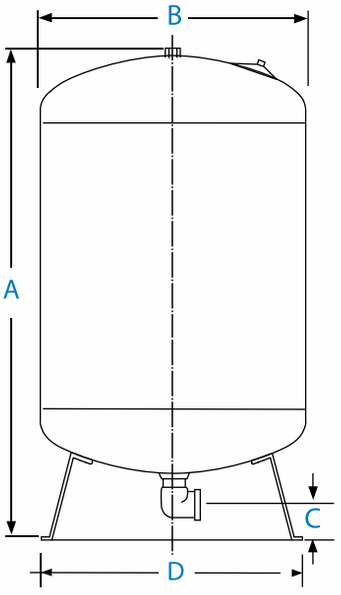


① Leak-Free, O-ring sealed air valve cap
② Carbon steel tank shell with two-part polyurethane / epoxy primed paint finish
③ Patented CAD-2 diaphragm design
④ Stainless steel water connection
⑤ Condensation reducing design
⑥ Virgin Polypropylene Liner

CE ACS Approved WRAS APPROVED PRODUCT NSF



SALES BY LIUMENG CAMBODIA
Phone: +855 16 955 955 | Telegram: @LIUMENGKH
info@LMCambodia.com | www.LMCambodia.com

# C2 Lite CAD™ SERIES



## FEATURES

- Patented CAD-2 diaphragm technology
- Unique 3 piece construction
- Reinforced Plastic Connection
- Durable continuous strand fiberglass sealed with epoxy resin
- NSF Standard 61, CE/PED, WRAS, ACS, ISO:9001 approved
- Rugged copolymer polypropylene base
- Quality brass air stem with o-ring seal
- No sweat design
- Comprehensive testing
- No maintenance

If you are looking for the proven performance of a GWS steel tank in a lightweight composite design, C2-Lite CAD™ series is the answer. Efficient and cost effective, C2-Lite CAD™ tanks are designed with the patented controlled action diaphragm design of GWS Challenger™ tanks. Unlike other composite tanks that hide tired old bag technology in a plastic shell, the patented CAD-2 diaphragm design is stronger and will not crease and wear out. It features a chlorine resistant 100% butyl diaphragm with a precision molded copolymer polypropylene liner for superior air and water separation. This patented design allows each size tank to have a properly sized water chamber matched to the drawdown performance of that tank. C2-Lite CAD™ tanks are easy to install, weather resistant and engineered to withstand even extreme environmental conditions. When it comes to performance and durability, the GWS C2-Lite CAD™ design cannot be beat.

C2-Lite CAD™ tanks are quality tested at several stages on the production line to insure the structural integrity of every tank. C2-Lite CAD™ tanks represent the best value for the investment and are the best quality composite vessels available today.



**SALES BY LIUMENG CAMBODIA**
Phone: +855 16 955 955 | Telegram: @LIUMENGKH
info@LMCambodia.com | www.LMCambodia.com

# SPECIFICATIONS

## C2-Lite CAD™ Series Models

| BSP | NTP | Nominal Volume | | Shipping (box) Volume | | Shipping (box) Weight | | Dimensions | | | | | | | |
|---|---|---|---|---|---|---|---|---|---|---|---|---|---|---|---|
| | | | | | | | | A | | B | | C | | D | |
| | | liter | gal | $m^3$ | $ft^3$ | kg | lbs | cm | inches | cm | inches | cm | inches | cm | inches |
| C2B-60LV | C2N-15GV | 60 | 15 | 0.13 | 4.44 | 8.62 | 19.0 | 65.01 | 25.59 | 4.50 | 1.75 | 42.13 | 16.60 | 23.88 | 9.40 |
| C2B-80LV | C2N-20GV | 80 | 20 | 0.16 | 5.79 | 10.89 | 24.0 | 86.50 | 34.06 | 4.50 | 1.75 | 42.13 | 16.60 | 23.88 | 9.40 |
| C2B-100LV | C2N-25GV | 100 | 25 | 0.19 | 6.66 | 12.70 | 28.0 | 98.03 | 38.59 | 4.50 | 1.75 | 42.13 | 16.60 | 23.88 | 9.40 |
| C2B-130LV | C2N-35GV | 130 | 35 | 0.23 | 8.26 | 15.42 | 34.0 | 124.15 | 48.88 | 4.50 | 1.75 | 42.13 | 16.60 | 23.88 | 9.40 |
| C2B-200LV | C2N-50GV | 200 | 50 | 0.35 | 12.24 | 20.19 | 44.5 | 109.91 | 43.27 | 5.70 | 2.25 | 54.60 | 21.50 | 30.23 | 11.90 |
| C2B-250LV | C2N-65GV | 250 | 65 | 0.41 | 14.50 | 24.95 | 55.0 | 135.47 | 53.33 | 5.70 | 2.25 | 54.60 | 21.50 | 30.23 | 11.90 |
| C2B-300LV | C2N-80GV | 300 | 80 | 0.52 | 18.23 | 28.12 | 62.0 | 164.43 | 64.74 | 5.70 | 2.25 | 54.60 | 21.50 | 30.23 | 11.90 |
| C2B-350LV | C2N-90GV | 350 | 90 | 0.59 | 20.66 | 33.11 | 73.0 | 144.84 | 57.02 | 5.70 | 2.25 | 61.77 | 24.30 | 34.04 | 13.40 |
| C2B-450LV | C2N-120GV | 450 | 120 | 0.74 | 26.06 | 36.29 | 80.0 | 183.16 | 72.11 | 5.70 | 2.25 | 61.77 | 24.30 | 34.04 | 13.40 |

Max. Working Pressure 8.6 bar / 125 psi
Max. Working Temperature 49°C / 120°F
Connection C2B-60LV - C2B-130LV 1" BSP
C2B-200LV-C2B-450LV 1 1/4" BSP
C2N-15GV - C2N-35GV 1" NPT C2N-50GV - C2N-120GV 1 1/4" NPT
Please refer to tank packaging for correct factory set pre-charge information.

Note: Minor dimensional variation may occur

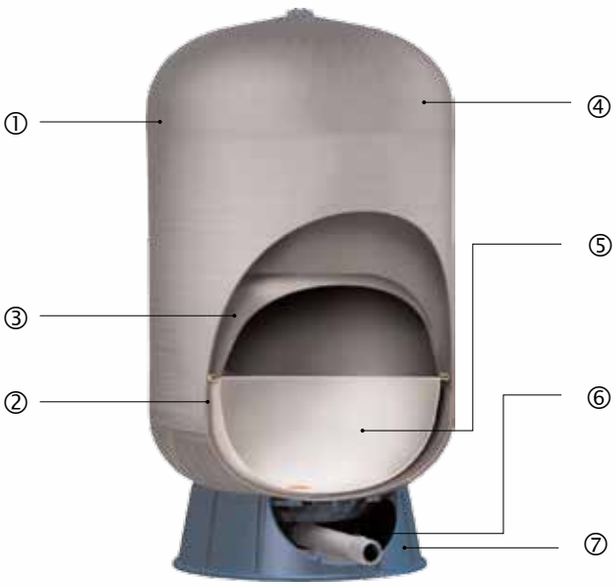


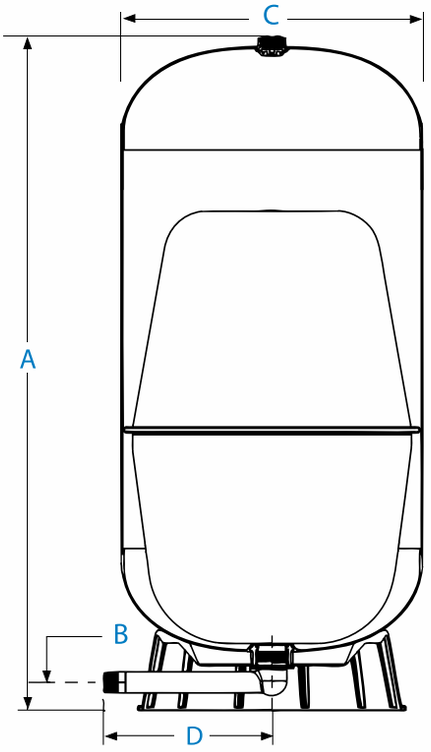


① Precision injection molded domes
② High-tech spin welding process
③ Patented CAD-2 controlled action diaphragm design
④ Durable continuous strand fiberglass sealed with epoxy resin
⑤ Virgin Polypropylene Liner
⑥ Reinforced Plastic Connection
⑦ Rugged base

CE ACS Approved WRAS APPROVED PRODUCT NSF



SALES BY LIUMENG CAMBODIA
Phone: +855 16 955 955 | Telegram: @LIUMENGKH
info@LMCambodia.com | www.LMCambodia.com

# FlowThru™ SERIES




## FEATURES

- Patented Flow-Thru Technology for freshest water
- Available in Composite and Steel
- Patented CAD-2 diaphragm technology
- No stagnation
- Patented Watervane, total recirculation of the water
- Leak free air valve cap sealed with closed cell foam
- Comprehensive testing
- No maintenance

Global Water Solutions now guarantees the freshest water quality possible with the revolutionary Flow-Thru™ Series design, available in both composite and steel models. All Flow- Thru™ tanks feature GWS's exlusive patented Flow-Thru™ technology which assures that your system will provide the freshest water quality possible by simply eliminating stagnation!

The Flow-Thru™ connection diverts system water into, and more importantly out of the tank while the pump is running. This constant flushing action assures that the water in the tank remains as fresh as possible and eliminates the possibility of stagnant water during normal system operation.

Both our steel and composite Flow-Thru™ tanks incorporate our proven patented controlled action diaphragm (CAD-2). CAD-2's steel clench ring regulates movement and prevents the diaphragm from rubbing against the tank wall.

Flow-Thru™ is also the ideal solution for constant pressure water system installers seeking to store water without the risk of stagnation.

Flow-Thru™ tanks are quality tested at several stages on the production line to insure the structural integrity of every tank. Flow-Thru™ tanks represent the best value for the investment and are the best quality Flow-Thru™ vessels available today.



SALES BY LIUMENG CAMBODIA
Phone: +855 16 955 955 | Telegram: @LIUMENGKH
info@LMCambodia.com | www.LMCambodia.com

# SPECIFICATIONS

## FlowThru™ Series Models

| BSP | NPT | Nominal Volume | | Shipping (box) Volume | | Shipping (box) Weight | | Dimensions A | | Dimensions B | |
|---|---|---|---|---|---|---|---|---|---|---|---|
| | | liter | gal | $m^3$ | $ft^3$ | kg | lbs | cm | inches | cm | inches |
| **Steel Models** | | | | | | | | | | | |
| GFU-80LV | GFU-80LV | 80 | 20 | 0.13 | 4.74 | 15.20 | 33.5 | 73.56 | 28.96 | 40.69 | 16.02 |
| GFU-170LV | GFU-170LV | 170 | 45 | 0.29 | 10.14 | 29.26 | 64.5 | 94.33 | 37.14 | 52.96 | 20.85 |
| GFU-325LV | GFU-325LV | 325 | 85 | 0.54 | 18.93 | 53.52 | 118.0 | 114.94 | 44.25 | 66.03 | 26.00 |
| **Composite Models** | | | | | | | | | | | |
| CFB-60LV | CFN-15GV | 60 | 15 | 0.13 | 4.44 | 8.60 | 19.0 | 65.00 | 25.60 | 42.13 | 16.59 |
| CFB-80LV | CFN-20GV | 80 | 20 | 0.16 | 5.53 | 10.90 | 24.0 | 86.51 | 34.06 | 42.13 | 16.59 |
| CFB-150LV | CFN-40GV | 150 | 40 | 0.32 | 11.45 | 15.90 | 35.0 | 77.44 | 30.49 | 61.77 | 24.32 |
| CFB-200LV | CFN-50GV | 200 | 50 | 0.34 | 11.95 | 20.20 | 44.5 | 109.91 | 43.27 | 54.56 | 21.48 |

System Connection: 1 1/4" BSP / NPT
Max. Working Pressure 8.6 bar / 125 psi
Max. Working Temperature 90°C / 194°F°F (steel) ; 49°C / 120°F (composite)
Please refer to tank packaging for correct factory set pre-charge information.

Note: Minor dimensional variation may occur

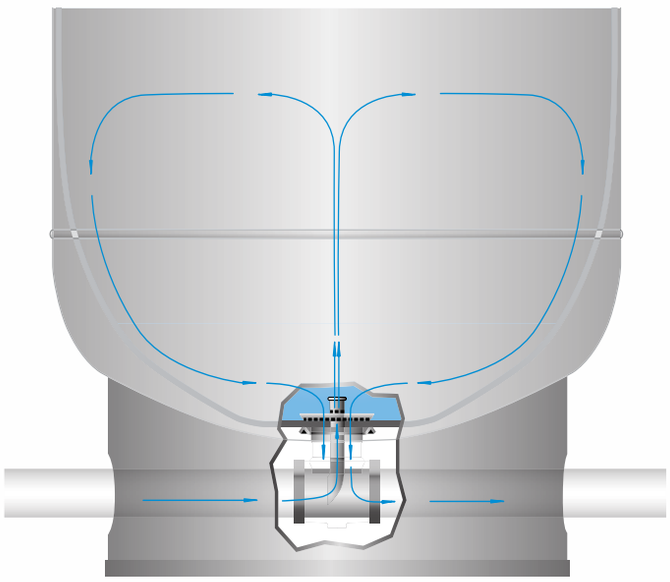

Flow-Thru™ technology assures total recirculation of the tank's water content.

Patented watervane flushes water through the tank eliminating the possibility of stagnant water.

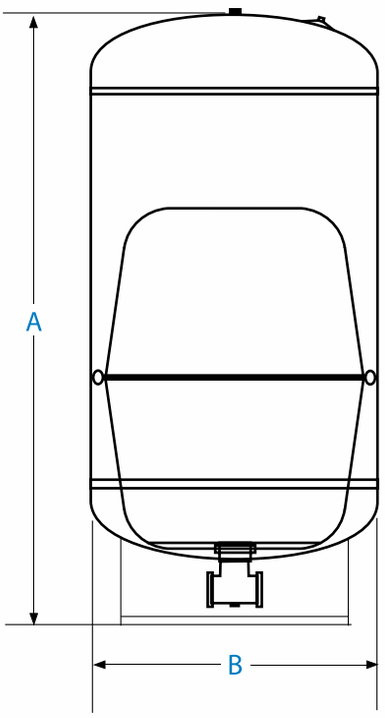


CE ACS Approved WRAS APPROVED PRODUCT NSF



SALES BY LIUMENG CAMBODIA
Phone: +855 16 955 955 | Telegram: @LIUMENGKH
info@LMCambodia.com | www.LMCambodia.com

# SuperFlow™ SERIES



## FEATURES

- 8 to 10,000 liters for sizes not covered by PressureWave™ and Challenger™ Series
- 10, 16 and 25 bar pressure rating
- Almond RAL 1013
- Built-in pressure gauge (Models SF100-SF10,000)
- ISO : 9001, CE approved

Global Water Solutions' SuperFlow™ tanks are ideally suited for applications where high-pressure ratings are required. These applications include booster systems, heating expansion and hammer arresting in high-rise and multistory buildings such as hotels, hospitals or business centres.

SuperFlow™ tanks range from 8 to 10,000 litres and are available in 10, 16 and 25 bar pressure ratings which makes GWS one of the most comprehensive suppliers globally. The interchangeable membrane design of the tanks allows you to replace the membrane whenever required, and the built-in pressure gauge, starting at tanks of 100 litres size, makes the system-pressure control as easy as possible.

SuperFlow™ Series vessels are quality checked at several stages during the production and given regular maintenance, we recommend pre-charge check every 3 month, these vessels represent the best value for the investment and are designed to serve your needs for years to come.



SALES BY LIUMENG CAMBODIA
Phone: +855 16 955 955 | Telegram: @LIUMENGKH
info@LMCambodia.com | www.LMCambodia.com

# SPECIFICATIONS

## SuperFlow™ Series Models

| Model Numbers | | | Connection | Nominal Volume | Ship Weight | | | Dimensions | |
|---|---|---|---|---|---|---|---|---|---|
| | | | | | 10 bar | 16 bar | 25 bar | A | B |
| Inline 10 bar | Inline 16 bar | Inline 25 bar | inches | liters | kg | kg | kg | cm | cm |
| N/A* | N/A* | SUB-12LX | 1” | 12 | N/A | N/A | 9 | 22 | 38 |
| N/A* | N/A* | SUB-19LX | 1” | 19 | N/A | N/A | 11 | 28 | 43 |
| N/A* | N/A* | SUB-35LX | 1” | 35 | N/A | | 22 | 38 | 47 |
| Vertical 10 bar | Vertical 16 bar | Vertical 25 bar | inches | liters | kg | kg | kg | cm | cm |
| N/A* | N/A* | SUB-50LV | 1” | 50 | N/A | N/A | 30 | 38 | 75 |
| N/A* | N/A* | SUB-60LV | 1” | 60 | N/A | N/A | 33 | 38 | 81 |
| N/A* | SMB-80LV | SUB-80LV | 1” | 80 | N/A | 26 | 46 | 43 | 96 |
| N/A* | SMB-100LV | SUB-100LV | 1” | 100 | N/A | 28 | 51 | 46 | 99 |
| N/A* | SMB-150LV | SUB-150LV | 1” | 150 | N/A | 50 | 85 | 50 | 110 |
| N/A** | SMB-200LV | SUB-200LV | 11/4” | 200 | N/A | 68 | 112 | 59 | 112 |
| N/A** | SMB-300LV | SUB-300LV | 11/4” | 300 | N/A | 79 | 130 | 64 | 123 |
| N/A** | SMB-500LV | SUB-500LV | 11/4” | 500 | N/A | 115 | 202 | 75 | 155 |
| SFB-750LV | SMB-750LV | SUB-750LV | 2” | 750 | 110 | 220 | 328 | 75 | 195 |
| SFB-850LV | SMB-850LV | SUB-850LV | 2” | 850 | 145 | 235 | 344 | 80 | 195 |
| SFB-1000LV | SMB-1000LV | SUB-1000LV | 2” | 1000 | 165 | 250 | 368 | 80 | 218 |
| SFB-1500LV | SMB-1500LV | SUB-1500LV | 2” | 1500 | 250 | 375 | 495 | 96 | 238 |
| SFB-2000LV | SMB-2000LV | SUB-2000LV | 2” | 2000 | 370 | 520 | 745 | 110 | 252 |
| SFB-3000LV | SMB-3000LV | SUB-3000LV | 2 1/2” | 3000 | 550 | 780 | 910 | 120 | 280 |
| SFB-4000LV | SMB-4000LV | SUB-4000LV | 3” | 4000 | 730 | 980 | 1290 | 145 | 310 |
| SFB-5000LV | SMB-5000LV | SUB-5000LV | 3” | 5000 | 840 | 1140 | 1472 | 145 | 372 |
| SFB-10000LV | SMB-10000LV | SUB-10000LV | 4” | 10000 | 1920 | 2500 | 2980 | 160 | 575 |
| Horizontal 10 bar | Horizontal 16 bar | Horizontal 25 bar | inches | liters | kg | kg | kg | cm | cm |
| N/A* | N/A* | SUB-24LH | 1” | 24 | N/A | N/A | 13.5 | 47 | 28 |
| N/A* | N/A* | SUB-50LH | 1” | 50 | N/A | N/A | 30 | 62 | 38 |
| N/A* | N/A* | SUB-60LH | 1” | 60 | N/A | N/A | 33 | 67 | 38 |
| N/A* | SMB-80LH | SUB-80LH | 1” | 80 | N/A | 26 | 46 | 72 | 43 |
| N/A* | SMB-100LH | SUB-100LH | 1” | 100 | N/A | 28 | 51 | 80 | 46 |

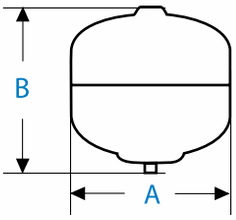


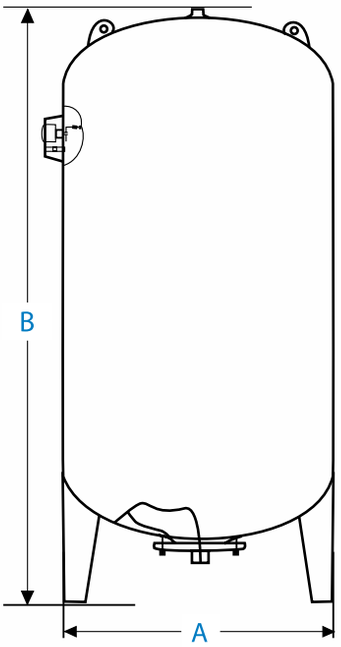


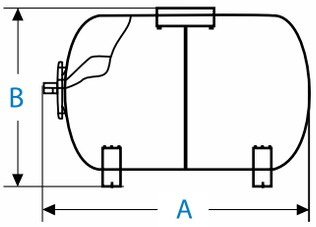


Note: Minor dimensional variation may occur

**Interchangable membranes**

EPDM for 12L - 4000L, Butyl for 5000L - 10000L, working temperature -10˚C / 14˚F to 90˚C / 194˚F

Tank precharge: 4.0 bar / 58 psi

*Use PressureWave™, Max™ or UltraMax™ Series tanks ** Use Challenger™ Series tanks



SALES BY LIUMENG CAMBODIA
Phone: +855 16 955 955 | Telegram: @LIUMENGKH
info@LMCambodia.com | www.LMCambodia.com

# ThermoWave™ SERIES




## FEATURES

- High grade butyl diaphragm
- Virgin polypropylene liner
- Two part polyurethane, epoxy primed paint finish
- Patented stainless steel water connection
- Leak free, o-ring sealed air valve cap
- Comprehensive testing
- Maintenance free

ThermoWave™ expansion tanks are specially designed for use in potable water heating applications.

Many homes and buildings have potable water heating systems to provide hot water for washing, cooking, showering, etc. As the water is heated it also expands. This expansion leads to increased system pressure and can cause serious damage. In most systems a relief valve is installed to vent the expanded water volume and prevent the system from exceeding maximum operating pressure. Unfortunately this creates wasted energy as hot water is vented and additional water must be filled and heated again. In order to safely accommodate the natural expansion of water without venting from a relief valve, a ThermoWave™ expansion tank is used. ThermoWave™ expansion tanks conserve water and energy while safely maintaining system operating pressures. They do so by temporarily absorbing the expanded water volume instead of allowing it to be vented out of a relief valve. And because ThermoWave™ expansion tanks use water chambers constructed from high grade butyl diaphragms and virgin polypropylene liners they ensure your potable water remains clean and safe.

ThermoWave™ expansion tanks are quality tested at several stages on the production line to ensure the structural integrity of every tank.

ThermoWave™ expansion tanks represent the best value for the investment and are the best quality expansion tanks available today.



**SALES BY LIUMENG CAMBODIA**
Phone: +855 16 955 955 | Telegram: @LIUMENGKH
info@LMCambodia.com | www.LMCambodia.com

# SPECIFICATIONS

## ThermoWave™ Series Models

| Model Numbers | Nominal Volume | | Shipping (box) Volume | | Shipping (box) Weight | | Dimensions A | | B | | C | |
|---|---|---|---|---|---|---|---|---|---|---|---|---|
| | liter | gal | $m^3$ | $ft^3$ | kg | lbs | cm | inches | cm | inches | cm | inches |
| **Inline Models** | | | | | | | | | | | | |
| TWB-2LX* | 2 | 0.5 | 0.055 | 1.94 | 12.80 | 28.22 | 20.6 | 8.1 | 12.6 | 5.0 | | |
| TWB-4LX | 4 | 1.1 | 0.0075 | 0.26 | 1.64 | 3.62 | 25.33 | 10.16 | 16.20 | 6.40 | | |
| TWB-8LX | 8 | 2.1 | 0.014 | 0.49 | 2.26 | 4.98 | 31.00 | 12.20 | 20.20 | 7.95 | | |
| TWB-12LX | 12 | 3.2 | 0.023 | 0.81 | 3.08 | 6.79 | 36.40 | 14.33 | 23.00 | 9.06 | | |
| TWB-18LX | 18 | 4.8 | 0.029 | 1.02 | 3.92 | 8.64 | 36.40 | 14.33 | 27.90 | 11.20 | | |
| TWB-24LX | 24 | 6 | 0.042 | 1.48 | 4.90 | 10.80 | 44.40 | 17.48 | 29.00 | 11.42 | | |
| TWB-35LX | 35 | 9.2 | 0.058 | 2.05 | 6.93 | 15.28 | 47.80 | 18.90 | 31.80 | 12.52 | | |
| **Horizontal Models** | | | | | | | | | | | | |
| TWB-20LH | 20 | 5.3 | 0.042 | 1.48 | 5.20 | 11.46 | 44.40 | 17.48 | 27.70 | 10.91 | 14.50 | 5.71 |
| TWB-24LH | 24 | 6 | 0.047 | 1.66 | 5.90 | 13.01 | 44.40 | 17.48 | 30.60 | 12.05 | 16.10 | 6.40 |
| TWB-35LH | 35 | 9.2 | 0.058 | 2.05 | 6.90 | 15.21 | 47.80 | 18.81 | 33.80 | 13.31 | 17.90 | 7.05 |
| TWB-60LH | 60 | 14 | 0.08 | 2.83 | 11.50 | 25.35 | 52.70 | 20.74 | 40.90 | 16.10 | 21.50 | 8.46 |
| **Vertical Models w/ base** | | | | | | | | | | | | |
| TWB-60LV | 60 | 14 | 0.08 | 2.83 | 11.28 | 24.87 | 62.00 | 24.41 | 38.90 | 15.31 | 16.00 | 6.30 |

System Connection: 3/4" BSP
Maximum Working Pressure: 10 bar / 150 psi
Factory pre-charge: 1.9 bar / 28 psi
Maximum Working Temperature: 90°C / 194°F
* TWB-2LX: 12 pcs/ box

Note: Minor dimensional variation may occur

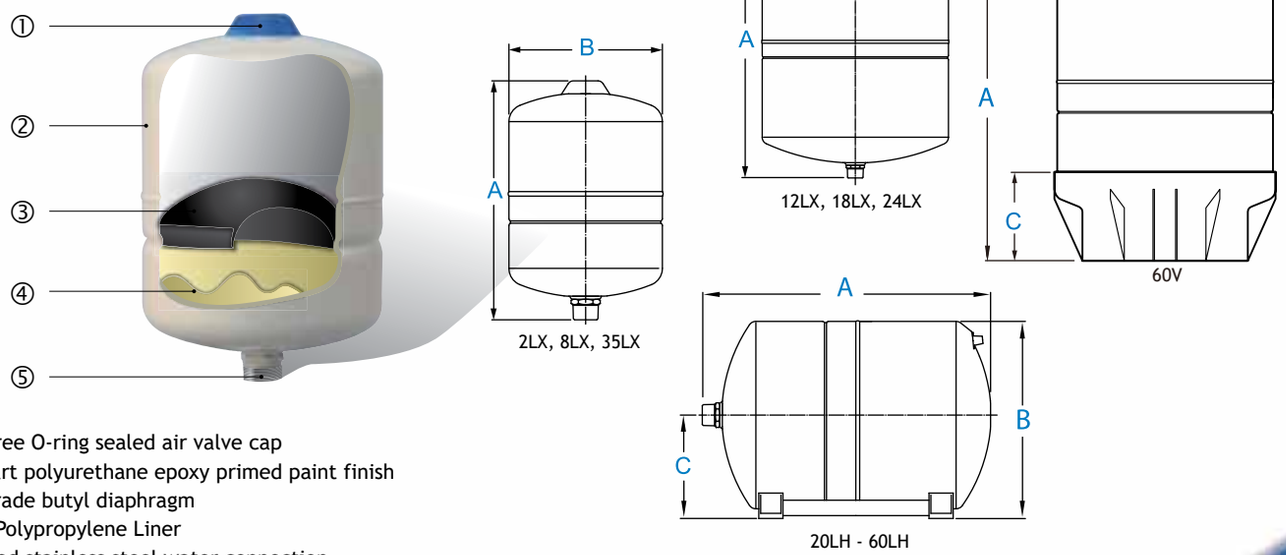


① Leak-free O-ring sealed air valve cap
② Two-part polyurethane epoxy primed paint finish
③ High grade butyl diaphragm
④ Virgin Polypropylene Liner
⑤ Patented stainless steel water connection

CE ACS Approved WRAS APPROVED PRODUCT



SALES BY LIUMENG CAMBODIA
Phone: +855 16 955 955 | Telegram: @LIUMENGKH
info@LMCambodia.com | www.LMCambodia.com

# HeatWave™ SERIES



## FEATURES

- High grade butyl diaphragm
- Two part polyurethane, epoxy primed paint finish
- Leak free, o-ring sealed air valve cap
- Comprehensive testing
- ISO:9001, GOST, CE/PED approved

HeatWave™ tanks are the quality solution for hydronic expansion. HeatWave™ tanks are built to the same stringent standards as the PressureWave™ and Challenger™ tanks.

With an incorporated hex nut system connection, HeatWave™ tanks are easy to install. Its air chamber sealed with a brass air valve and o-ring sealed air cap will provide many years of leak free and service free life. Its two part polyurethane, epoxy primed paint finish will withstand the harshest indoor and outdoor climates throughout the world. HeatWave™ tanks are quality tested at several stages on the production line to insure the structural integrity of every tank.

The HeatWave™ expansion tank is designed to be either supported by the system piping, the wall mounting bracket (inline models) or freestanding (vertical models w/ base).

The expansion tank, pipes and your connections if installed incorrectly could leak water. Install the expansion tank in a location where any water leak will not cause damage. The manufacturer is not responsible for any water damage in connection with this expansion tank.



SALES BY LIUMENG CAMBODIA
Phone: +855 16 955 955 | Telegram: @LIUMENGKH
info@LMCambodia.com | www.LMCambodia.com

# SPECIFICATIONS

## HeatWave™ Series Models

| Model Numbers | Nominal Volume | | Shipping (box) Volume | | Shipping (box) Weight | | Dimensions | | | | | |
|---|---|---|---|---|---|---|---|---|---|---|---|---|
| | | | | | | | A | | B | | C | |
| | liter | gal | $m^3$ | $ft^3$ | kg | lbs | cm | inches | cm | inches | cm | inches |
| **Inline Models** | | | | | | | | | | | | |
| HWB-2LX* | 2 | 0.5 | 0.055 | 1.94 | 12.39 | 27.31 | 20.55 | 8.09 | 12.60 | 4.96 | | |
| HWB-4LX | 4 | 1.1 | 0.01 | 0.35 | 1.62 | 3.57 | 26.05 | 10.26 | 16.2 | 6.38 | | |
| HWB-8LX | 8 | 2.1 | 0.016 | 0.57 | 2.00 | 4.41 | 30.95 | 12.18 | 20.20 | 7.95 | | |
| HWB-12LX | 12 | 3.2 | 0.023 | 0.81 | 2.70 | 5.95 | 36.40 | 14.33 | 23.00 | 9.06 | | |
| HWB-18LX | 18 | 4.8 | 0.029 | 1.02 | 3.40 | 7.50 | 36.40 | 14.45 | 27.90 | 11.20 | | |
| HWB-24LX | 24 | 6 | 0.042 | 1.48 | 4.30 | 9.48 | 44.40 | 17.48 | 29.00 | 11.42 | | |
| HWB-35LX | 35 | 9.2 | 0.058 | 2.05 | 6.66 | 14.68 | 47.80 | 18.82 | 31.80 | 12.50 | | |
| **Vetical Models w/ base** | | | | | | | | | | | | |
| HWB-60LV | 60 | 14 | 0.102 | 3.60 | 10.26 | 22.62 | 57.60 | 22.68 | 38.90 | 15.31 | 16.00 | 6.30 |
| HWB-80LV | 80 | 20 | 0.134 | 4.73 | 14.02 | 30.91 | 77.10 | 30.35 | 38.90 | 15.31 | 16.00 | 6.30 |
| HWB-100LV | 100 | 26.4 | 0.168 | 5.93 | 18.77 | 41.38 | 80.40 | 31.65 | 43.00 | 16.90 | 12.90 | 5.08 |
| HWB-130LV | 130 | 34.3 | 0.21 | 7.41 | 26.70 | 58.86 | 107.40 | 42.28 | 43.00 | 16.90 | 12.90 | 5.08 |
| HWB-150LV | 150 | 40 | 0.28 | 9.89 | 33.30 | 73.41 | 92.80 | 36.54 | 53.00 | 20.87 | 13.85 | 5.45 |

Factory pre-charge: HWB-2LX - HWB-24LX 0.7 bar/ 10 psi ; HWB-35LX 1 bar/15 psi ;
HWB-60LV-HWB-150LV 1.5 bar/ 22 psi

Note: Minor dimensional variation may occur

Maximum Working Temperature: 99°C / 210°F

Maximum working pressure 6 bar / 87 psi

System Connection: HWB-2LX – HWB-80LV chromed carbon steel 3/4" BSP inline ; HWB-100LV – HWB-150LV stainless steel 1" BSP Elbow

* HWB-2LX: 12 pcs / box

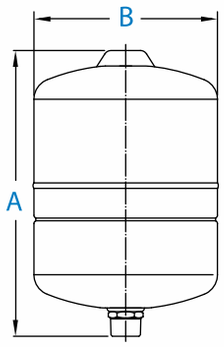

2LX, 4LX, 8LX, 35LX

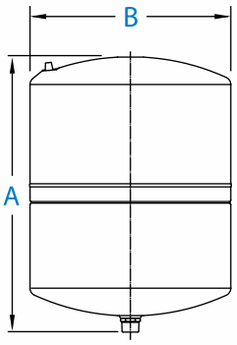

12LX, 18LX, 24LX

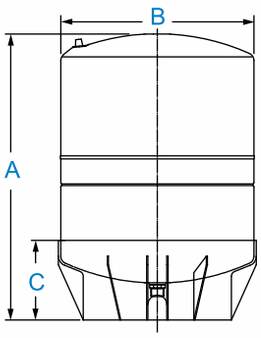

60LV, 80LV

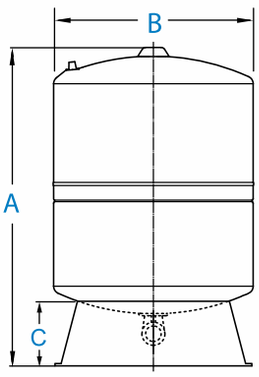

100LV, 150LV

HeatWave™ tanks are restricted for use in closed loop non potable hot water systems only.
Corrosion inhibitors such as propylene glycol can be used in mixture concentrations up to 50%.
Ethylene glycols should be avoided at all cost.



SALES BY LIUMENG CAMBODIA
Phone: +855 16 955 955 | Telegram: @LIUMENGKH
info@LMCambodia.com | www.LMCambodia.com

# SolarWave™ SERIES



## FEATURES

- High temperature butyl diaphragm
- High expansion volume factor
- Two part polyurethane, epoxy primed paint finish
- Leak free o-ring sealed air valve cap
- Comprehensive testing
- No maintenance

If you are looking for the proven performance of a GWS tank, SolarWave™ expansion tanks are the quality solution for your solar system. SolarWave™ expansion tanks are designed to control the expansion and contraction of solar thermal transfer fluids in solar heating Systems. The SolarWave™ Series is intended for use on the solar liquid loop of indirect thermal transfer systems.

SolarWave™tanks are built to the same stringent standards as PressureWave™ and Challenger™ tanks. They meet the demands of solar collector systems for both thermal expansion and contraction in order to maintain safe and efficient operating pressures within the solar liquid system.

A properly sized SolarWave™ tank will eliminate the need for recharging the system after periods of no use or in cases of extreme temperature buildup. It will eliminate relief valve release of system liquid and maintain minimum operating pressures throughout the system.

SolarWave™ Series expansion tanks have a large acceptance volume making them ideal for expansion and contraction control of solar collector systems which operate under a wide range of pressure and temperature.

SolarWave™ tanks are quality tested at several stages on the production line to insure the structural integrity of every tank. SolarWave™ tanks represent the best value for the investment and are the best quality solar expansion vessels available today.



**SALES BY LIUMENG CAMBODIA**
Phone: +855 16 955 955 | Telegram: @LIUMENGKH
info@LMCambodia.com | www.LMCambodia.com

# SPECIFICATIONS

## SolarWave™ Series Models

| Model Numbers | Nominal Volume | | Shipping (box) Volume | | Shipping (box) Weight | | Dimensions | | | | | |
|---|---|---|---|---|---|---|---|---|---|---|---|---|
| | | | | | | | A | | B | | C | |
| | liter | gal | $m^3$ | $ft^3$ | kg | lbs | cm | inches | cm | inches | cm | inches |
| SWB-2LX* | 2 | 0.53 | 0.055 | 1.94 | 12.39 | 27.31 | 20.55 | 8.09 | 12.60 | 4.96 | | |
| SWB-8LX | 8 | 2.1 | 0.016 | 0.57 | 2.17 | 4.78 | 30.95 | 12.19 | 20.20 | 7.95 | | |
| SWB-12LX | 12 | 3.2 | 0.023 | 0.81 | 2.87 | 6.33 | 36.40 | 14.33 | 23.00 | 9.06 | | |
| SWB-18LX | 18 | 4.8 | 0.029 | 1.02 | 3.80 | 8.38 | 36.40 | 14.33 | 27.90 | 10.98 | | |
| SWB-24LX | 24 | 6 | 0.042 | 1.48 | 5.04 | 11.11 | 44.40 | 17.48 | 29.00 | 11.42 | | |
| SWB-35LX | 35 | 9.2 | 0.058 | 2.05 | 6.64 | 14.64 | 47.80 | 18.82 | 31.80 | 12.50 | | |
| SWB-60LV | 60 | 14 | 0.102 | 3.60 | 10.80 | 23.81 | 57.60 | 22.68 | 38.90 | 15.31 | 16.00 | 6.30 |
| SWB-80LV | 80 | 20 | 0.134 | 4.73 | 14.02 | 41.38 | 77.10 | 30.35 | 38.90 | 15.31 | 16.00 | 6.30 |
| SWB-100LV | 100 | 26.4 | 0.168 | 5.93 | 18.77 | 41.38 | 80.40 | 31.65 | 43.00 | 16.90 | 12.90 | 5.08 |
| SWB-130LV | 130 | 34.3 | 0.21 | 7.41 | 26.78 | 59.04 | 107.40 | 42.28 | 43.00 | 16.90 | 12.90 | 5.08 |
| SWB-150LV | 150 | 40 | 0.21 | 7.41 | 34.97 | 77.10 | 93.80 | 36.93 | 53.00 | 20.87 | 12.90 | 5.08 |

Maximum system temperature: 130°C / 266°F

Maximum working pressure: 10 bar / 150 psi

System connection: SWB-2LX – SWB-80LV stainless steel 3/4" BSP inline ; SWB-100LV – SWB-150LV stainless steel 1" BSP Elbow

Factory pre-charge: 1.9 bar / 28 psi

* SWB-2LX and SWN-2LX: 12 pcs/ box

Note: Minor dimensional variation may occur

Above 150 liter use Challenger™ Series tanks

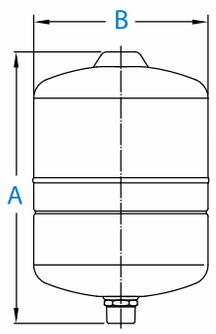


2LX, 8LX, 35LX

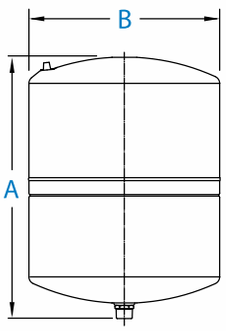


12LX, 18LX, 24LX

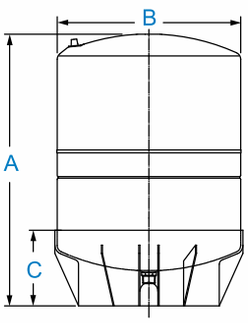


60LV, 80LV

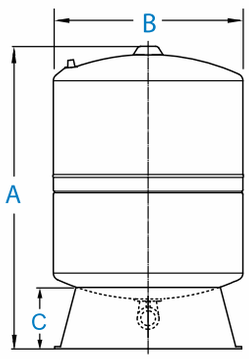


100LV, 150LV

If the temperature of the solar system has the potential to rise above the evaporation point of the solar liquid a condenser chamber or coil is required between the solar collector and SolarWave™ Series expansion tank in order to control the maximum fluid temperature at the SolarWave™ tank.

SolarWave™ tanks are restricted for use in closed loop indirect solar hot water systems only.
Corrosion inhibitors such as propylene glycol can be used in mixture concentrations up to 50%.
Ethylene glycols should be avoided at all cost.



SALES BY LIUMENG CAMBODIA
Phone: +855 16 955 955 | Telegram: @LIUMENGKH
info@LMCambodia.com | www.LMCambodia.com

# PumpWave™ SERIES




## FEATURES

- Starting pressure adjustable from 1 to 2.5 bar
- LED Indicators: Power On, Pump On/Pump Off, Dry Run Control, Reset
- Relay for direct command of motor up to 1.5 kW 220 V AC 50/60 Hz

The PumpWave™ Series is an electronic autoclave pump control, which eliminates frequent small drawoff pump starts due to leaks and low flow pumping applications. PumpWave™ combines an internal water reservoir with an electronic control that allows for complete automatic management of most electric pumps. The process is simple. PumpWave™ draws water from the internal water reservoir until the adjustable START pressure is reached, then PumpWave™ switches the electronic pump on and allows it to run until there is no longer any flow within the system. PumpWave™ assures a constant flow and provides guaranteed protection against pump dry run. PumpWave™ simplifies pump installation as it doubles as a sturdy pump stand suitable for most electric pumps, saving space and assembly time.

PumpWave™ threads directly onto the 1" water connection of any GWS horizontal tank for full pump control with the right pressure tank.

| Model | Weight (kg) | Max. Pressure (bar) | Connection | Dimensions | |
|---|---|---|---|---|---|
| | | | | Height | Width |
| PUW Electronic | 2.0 | 10 | 1" GAS | 22 cm | 15 cm |

The PumpWave™ can also be purchased together with the PressureWave Series Horizontal tanks.

- PumpWave™ electronic is suitable for single-phase motors up to 1.5 kW
- Factory START pressure at 1.8 bar
- PumpWave™ must be installed with an electric pump with a minimum operating pressure of at least 1 bar above the programmed START pressure
- Maximum Capacity: 100 L/min



SALES BY LIUMENG CAMBODIA
Phone: +855 16 955 955 | Telegram: @LIUMENGKH
info@LMCambodia.com | www.LMCambodia.com

# Accessories



### 3 Way Connector

A3WYC-BSP
3 Way Brass Connector 1" MFF BSP

A3WYC-NPT
3 Way Brass Connector 1" MFF NPT



### 5 Way Connector

A5WYC-BSP
5 Way Brass Connector 1" MFF BSP 1/4" MF

A5WYC-NPT
5 Way Brass Connector 1" MFF NPT 1/4" MF



### Stainless Steel Flex Connector

A70MFC-BSP
700mm M/F SS Flex Connector 1" BSP

A70MFC-NPT
700mm M/F SS Flex Connector 1" NPT

A80MFC-BSP
800mm M/F SS Flex Connector 1" BSP

A80MFC-NPT
800mm M/F SS Flex Connector 1" NPT

A100MFC-BSP
1000mm M/F SS Flex Connector 1" BSP

A100MFC-NPT
1000mm M/F SS Flex Connector 1" NPT



### Stainless Steel Flex Connector w/ Elbow

A70MFEC-BSP
700mm M/F SS Flex Elbow Connector 1" BSP

A70MFEC-NPT
700mm M/F SS Flex Elbow Connector 1" NPT

A80MFEC-BSP
800mm M/F SS Flex Elbow Connector 1" BSP

A80MFEC-NPT
800mm M/F SS Flex Elbow Connector 1" NPT

A100MFEC-BSP
1000mm M/F SS Flex Elbow Connector 1" BSP

A100MFEC-NPT
1000mm M/F SS Flex Elbow Connector 1" NPT



### Smart Pressure Valve

ASP1
Smart Pressure Valve with check valve 1" NPT

ASP2
Smart Pressure Valve without check valve 1" NPT



### Pressure Switches

APSW2F
Pressure Switch with 1/4" Female Connection 1.4-2.8 bar (20/40 psi)

APSW3F
Pressure Switch with 1/4" Female Connection 2.1-3.4 bar (30/50 psi)



### Pressure Gauges

A2PG
2" Pressure Gauge 0-7 bar (100 psi) 1/4" male

A25PG
2.5" Pressure Gauge 0-10 bar (145 psi) 1/4" male



### Universal Bracket

BR UNIVERSAL
Stainless belt with mounting bracket.



SALES BY LIUMENG CAMBODIA
Phone: +855 16 955 955 | Telegram: @LIUMENGKH
info@LMCambodia.com | www.LMCambodia.com

**SALES BY LIUMENG CAMBODIA**
Phone: +855 16 955 955 | Telegram: @LIUMENGKH
info@LMCambodia.com | www.LMCambodia.com

**SALES BY LIUMENG CAMBODIA**
Phone: +855 16 955 955 | Telegram: @LIUMENGKH
info@LMCambodia.com | www.LMCambodia.com

**SALES BY LIUMENG CAMBODIA**

Phone: +855 16 955 955 | Telegram: @LIUMENGKH

info@LMCambodia.com | www.LMCambodia.com

**SALES BY LIUMENG CAMBODIA**
Phone: +855 16 955 955 | Telegram: @LIUMENGKH
info@LMCambodia.com | www.LMCambodia.com

## REGISTERED OFFICE

5th floor, 37 Esplanade, St Helier, Jersey JE1 2TR
The Channel Islands

## EUROPE

5, rue Henri Tudor, L-5366 Munsbach, Luxembourg
Tel: +352 263 507 73 15  EFax: +1 781 658 2511

## ITALY

via Emilia Ovest, 56 (int.7-8)
42048 Rubiera, Italy
Tel: +39 0522 626307  Fax: +39 0522 260216

## UNITED KINGDOM

Preese Hall Farm, Weeton, PR4 3HT
Tel: +44 1253836571  EFax: +1 781 658 2511

## MIDDLE EAST

Girne Mahallesi, Irmak Sokak, Küçükyalı İş Merkezi A Blok No: 30
34852 Maltepe, İstanbul
Tel: +90 216 35 25 750  Fax: +90 216 35 25 750

## AFRICA

9 Midley road Jet Park, Boksburg Gauteng 1460, South Africa
Tel: +27 (0) 11 918-9501  EFax: +1 781 658 2511

## INDIA

1st Floor, Room No. 204, World Trade Tower, Barakhamba Lane,
Connaught Place, New Delhi - 110001
Tel: +91 11 43551064  Cell: +91 9810504587

## ASIA

No. 553, Zhongshan Road, Qingshui, Taichung, Taiwan, 43643
Tel:  +886 4 2622 3030  Fax:+886 4 2623 3300

## CHINA

No 69 Shao Hai Road, Hetao District,
Chengyang, China
Tel: 86-532-6688 8198, 6688 8199  Fax: +86 532 66888193

## KOREA

#484-5,Hun Chang bldg 7F,  Myeong Jang 1 Dong, Dong Rae Gu,
Busan, Korea.
Tel: +82-51-526-7504  Fax: +82-51-527-7504  Cell: +82-010-3877-4349

## LATIN AMERICA

P.O. Box #2107-#2050 San Pedro, Costa Rica
Tel: +506 2253 8405  EFax: +1 781 658 2511

## NORTH AMERICA

P.O. Box #782 300 Pond Street Randolph, MA 02368 U.S.A.
Tel:  +1 781 607 2607  EFax: +1 781 658 2511

E-mail: info@globalwatersolutions.com  www.globalwatersolutions.com

The information and data in this document is subject to change without prior notice.



**SALES BY LIUMENG CAMBODIA**
Phone: +855 16 955 955 | Telegram: @LIUMENGKH
info@LMCambodia.com | www.LMCambodia.com